ASO genset

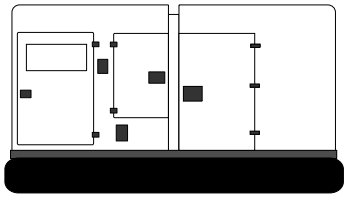

Generator set

Sound-proof type

WPS60S

SPECIFICATIONS

SE series
WPS60S
50 Hz @ 1500rpm,3-phase/5-wiring

1 Standards & Conditions

Design Standards

The designs and the productions are in conformity with:

- Conformite Europeenne (CE)
- China Compulsory Certification (CCC)
- ISO8528-5:2005
- GB/T2820.5-2009

Environmental Operating Conditions

- Installation place: Outdoors or indoors (well ventilated).
- Ambient temperature: -25℃ to 45℃.The coolant heater is needed when the temperature is below 5℃
- Humidity: Less than 80%.
- Altitude: Below one thousand (1000) meters.

Factory Inspection

- Inspection items.
- Protection devices working test.
- Starting ability in normal temperature.
- 50% rated power load moment capability.
- Voltage deviation and speed variation: 0%, 25%, 50%, 75%, 100%, 110% Load.

Painting Process

- Painting process specifications and colors are based on the manufacturer's standard.
- The customer could also choose the color which the manufacturer offers.

2 General Features

- Perkins engine 1103A-33TG2
- Close coupled to a MECC alternator ECO32-2L/4
- Microprocessor control module PLC-920
- NADER main circuit breaker: 100A
- Rotate speed governor: Mechanical governor
- Excitation System: Self excited , SHUNT
- A.V.R.Model: DSR
- Key switch
- Emergency stop switch
- ATS (automatic transfer switch) receptacle
- 1x12V/70AH sealed for life maintenance free battery
- Lockable battery isolator switch
- Powder coated canopy
- 50℃ radiator
- Oil pump on the engine
- Steel base frame with forkslots
- Vibration isolators between the engine/alternator and base frame
- Dry type air filter
- Base fuel tank for 12 hours running
- Drain points for fuel tank
- Operation Manual / Specifications

3 Equipment Specification

General technical data

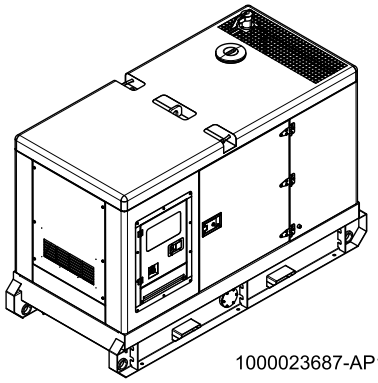

1000023687-AP1-B3

Model..... WPS60S

Structure type ..... R

Tank capacity.....180L

Dry weight..... 1538kg

Sound pressure level @ 1m/7m ..... 80.7dB(A)/67.4dB(A)

Sound power acc. 2000/14/EC.....95.3dB(A)

Dimensions L×W×H..... 2338x1080x1551mm

Standby Power 66kVA/53kW

Prime Power..... 60kVA/48kW

Voltage	380V	400V	415V	440V
Ampere	91.2A	86.6A	83.5A	78.7A

Genset Fuel Consumption					
Frequency/Load	25%	50%	75%	100%	110%
50Hz (L/h)	N/A	7.2	10.4	13.9	15.4

Diesel Engine

1000090673-AP1-A4

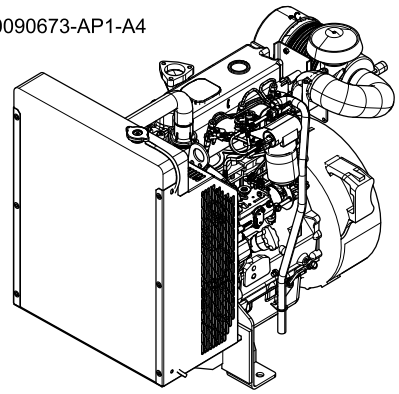

Engine Manufacturer/Brand.....Perkins
Engine Model..... 1103A-33TG2
Dimensions L×W×H.....1049×634×951mm
Dry Weigh (approx.) 420kg
Number of Cylinders.....3
Bore 105mm
Stroke 127mm
Displacement.....3.3L
Compression Ratio.....17.25
Type of Iinjection..... Direct injection
Intake System..... Turbocharged
Intake Resistance .....≦8kPa
Cooling System .....Water cooled
Fan ..... Pusher
Battery Voltage 12V
Type of Fuel....RF75-T-96 / DIN EN590 / BS2869 class A2
Type of Oil APi-CG4/ CH4
Oil Capacity 8.31L
Type of Coolant .....Glycol mixture
Coolant Capacity 10.2L
Back Pressure .....≦10kPa
Standby Power 60.5kW
Prime Power 55kW
Fuel Consumption(100%load).....13.9L/h

Alternator

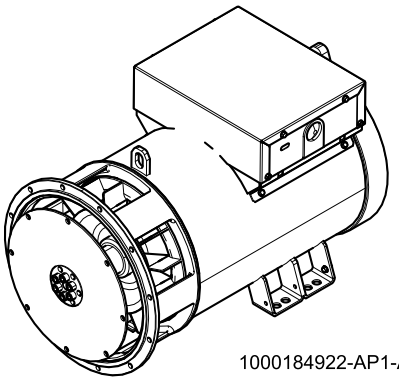

1000184922-AP1-A1

Alternator Manufacturer/Brand ..... Mecc alte
Alternator Model ECO32-2L/4
Exciter.....Brushless
Cooling Fan ..... Cast alloy aluminum
Windings.....100% copper
Insulation Class ..... H
Winding Pitch.....2/3
Terminals 12
Drip Proof IP21
Altitude.....≤1000m
Overspeed 2250rpm
Air Flow..... 11.8m³/min(50Hz),14.5m³/min(60Hz)
Voltage Regulation .....±1.0%
Total harmonic TGH / THCat no load < 1.5 % - on load < 5%
Telephone Interference.....THF<2%;TIF<45

PLC-920 Control System

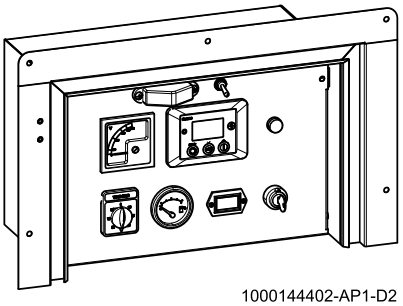

1000144402-AP1-D2

PLC-920 is an advanced control module based on micro-processor designed to control the engine via a key switch and push buttons on the front panel. The module is used to start and stop the engine and indicate fault conditions, automatically shutting down the engine and giving a true first up fault condition of an engine failure.

Standard Control Function

- Manual Engine Control Module
- Low Oil Pressure
- High Engine Temperature
- Auxiliary Shutdown
- Overspeed Protection
- Protection hold-off timer
- Charge Failure warning

4 Overall Dimensions

1000023687-DR1-B3

Dry weight	1538kg
Fuel tank capacity	180L
Dimensions L x W x H	2338x1080x1551mm

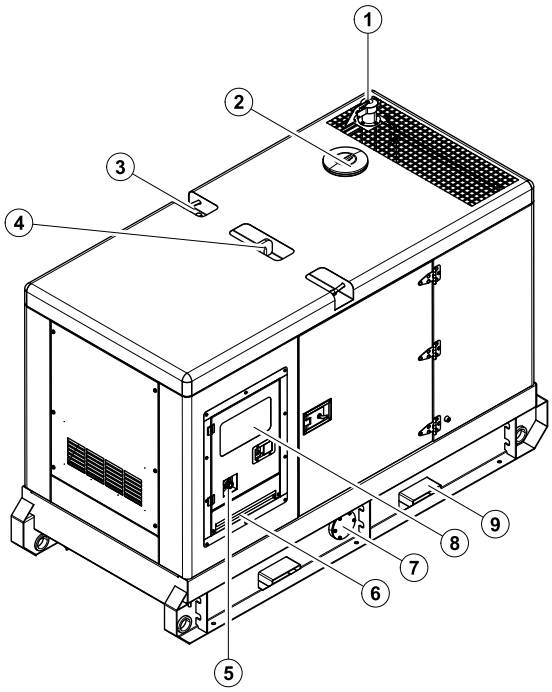

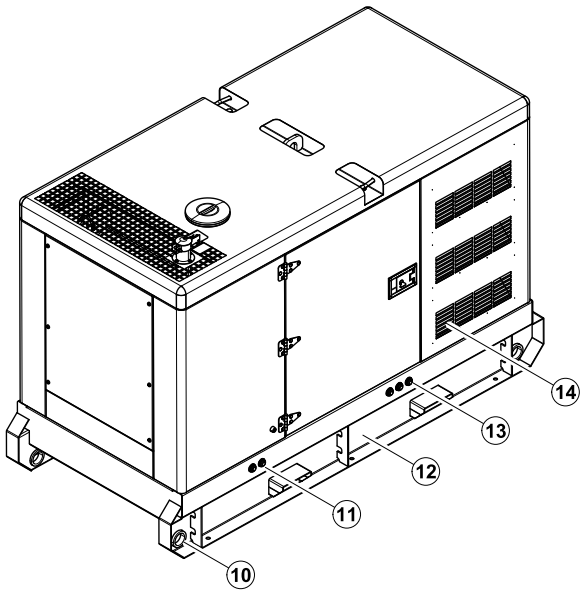

⑦ Fuel drain
⑥ Cable trench
⑤ Emergency stop switch
④ Lifting lug
③ Roping lug
② Coolant inlet
① Exhaust gas outlet
⑭ Air inlet
⑬ Coolant drain/
External fuel inlet/return hose fitting
⑫ Base frame
⑪ Oil drain hose fitting
⑩ Tie down
⑨ Fork lift channel
⑧ Control cabinet

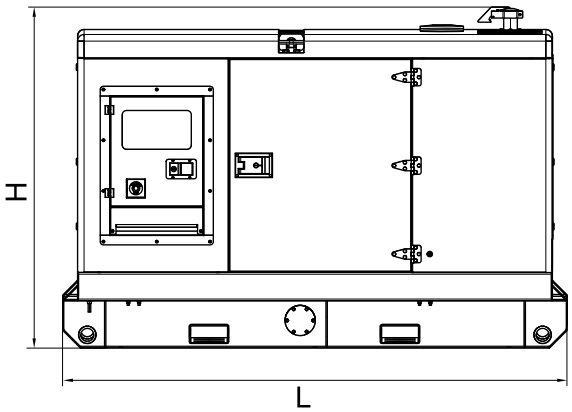

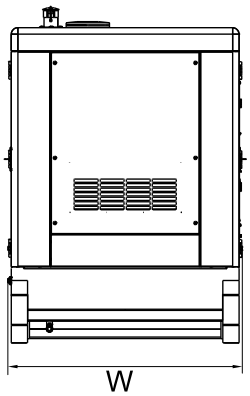

5 Control System

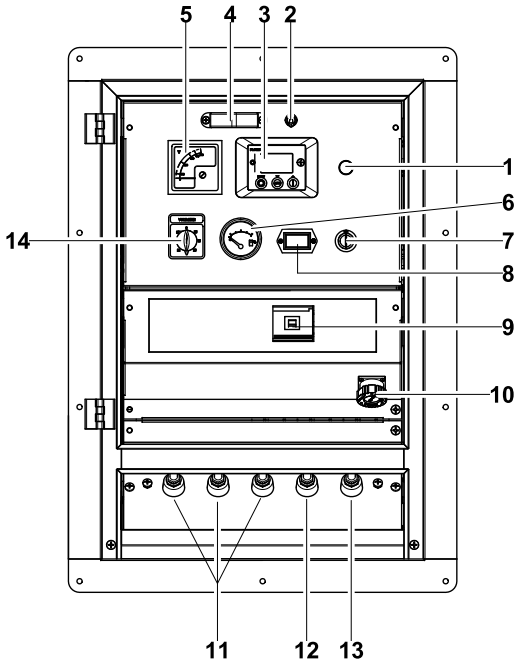

Control & field wiring cabinet

Ref.	Description
1	Charge indicator
2	Control cabinet lamp switch
3	Control module
4	Control cabinet lamp
5	Voltage meter
6	Fuel level meter
7	Key switch
8	Time counter
9	Main circuit breaker
10	Mains input /ATS /Remote communication connector
11	Live wire terminal
12	Neutral wire terminal
13	Ground wire terminal
14	Voltmeter change-over switch

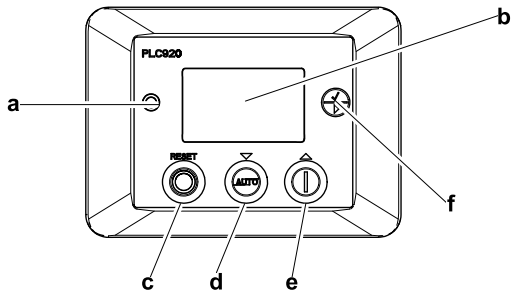

Control module

Ref.	Description
a	Alarm indicator
b	Main status display
c	Stop/reset button； Next page (Configuration mode only)
d	Auto start button； Decrease value/next item (Configuration mode only)
e	Start button； Increase value/next item (Configuration mode only)
f	Navigation button； Accept (Configuration mode only)

1000144402-IT1-D2