ASO genset

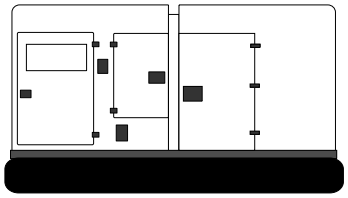

Generator set

Sound-proof type

WPS20S

SPECIFICATIONS

SE series
WPS20S
50 Hz @ 1500rpm,3-phase/5-wiring

1 Standards & Conditions

Design Standards

The designs and the productions are in conformity with:

- Conformite Europeenne (CE)
- China Compulsory Certification (CCC)
- ISO8528-5:2005
- GB/T2820.5-2009

Environmental Operating Conditions

- Installation place: Outdoors or indoors (well ventilated).
- Ambient temperature: -25℃ to 45℃.The coolant heater is needed when the temperature is below 5℃
- Humidity: Less than 80%.
- Altitude: Below one thousand (1000) meters.

Factory Inspection

- Inspection items.
- Protection devices working test.
- Starting ability in normal temperature.
- 50% rated power load moment capability.
- Voltage deviation and speed variation: 0%, 25%, 50%, 75%, 100%, 110% Load.

Painting Process

- Painting process specifications and colors are based on the manufacturer's standard.
- The customer could also choose the color which the manufacturer offers.

2 General Features

- Perkins engine 404D-22G
- Close coupled to a Stamford alternator PI144D
- Microprocessor control module PLC-7320
- SCHNEIDER main circuit breaker: 3-Phase 32A
- Rotate speed governor: Mechanical governor
- Excitation System: Self excited
- A.V.R.Model: AS480
- Key switch
- Emergency stop switch
- ATS (automatic transfer switch) receptacle
- 1x12V sealed for life maintenance free battery
- Lockable battery isolator switch
- Powder coated canopy
- 50℃ radiator
- Oil pump on the engine
- Steel base frame with forkslots
- Vibration isolators between the engine/alternator and base frame
- Dry type air filter
- Base fuel tank for 24 hours running
- Drain points for fuel tank
- Operation Manual / Specifications

3 Equipment Specification

General technical data

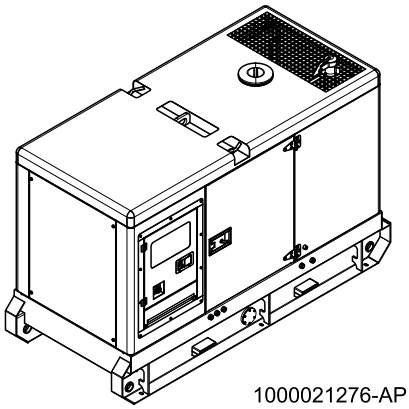

1000021276-AP1-B2

Model..... WPS20S

Structure type ..... R

Tank capacity.....140L

Dry weigh..... 1036kg

Noise level @7m .....N/A

Dimensions L×W×H.....2192×1013×1470.5mm

Standby Power 21.5kVA/17.2kW

Prime Power 20kVA/16kW

Voltage	380V	400V	415V	440V
Ampere	30.4A	28.9A	27.8A	26.2A

Genset Fuel Consumption					
Frequency/Load	25%	50%	75%	100%	110%
50Hz (L/h)	N/A	2.9	4.0	5.3	6.1

Diesel Engine

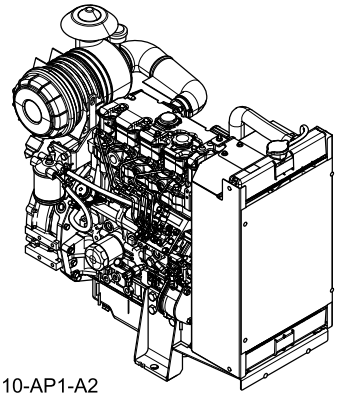

1000090010-AP1-A2

Engine Manufacturer/Brand.....Perkins
Engine Model..... 404D-22G
Dimensions L×W×H.....915×477×840mm
Dry Weigh (approx.) 242kg
Number of Cylinders.....4
Bore 84mm
Stroke 100mm
Displacement.....2.216L
Compression Ratio 23.3
Type of injection.....Indirect injection
Intake System..... Natural aspirated
Intake Resistance .....≦6.4kPa
Cooling System .....Water cooled
Fan ..... Pusher
Battery Voltage 12V
Type of Fuel..... EPA2D 89.330-96/CEC RF-06-99
Type of Oil ..... API-CH-4/ ACEA E5
Oil Capacity 10.6L
Type of Coolant .....Glycol mixture
Coolant Capacity 7.0L
Back Pressure .....≦10.2kPa
Standby Power 20.6kW
Prime Power 18.7kW
Fuel Consumption(100%load).....243g/kWh

Alternator

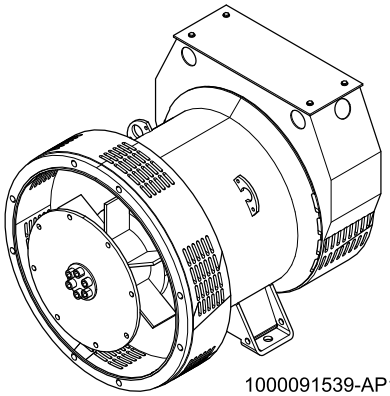

1000091539-AP1-A1

Alternator Manufacturer/Brand ..... Stamford
Alternator Model PI144D
Exciter.....Brushless
Cooling Fan ..... Plastic
Windings.....100% copper
Insulation Class ..... H
Winding Pitch.....2/3
Terminals 12
Drip Proof IP23
Altitude.....≤1000m
Overspeed 2250rpm
Air Flow..... 0.10 m³/s(50Hz),0.122m³/s(60Hz)
Voltage Regulation .....±1.0 %
Total harmonic TGH / THCat no load < 1.5 % - on load < 5%
Telephone Interference.....THF<2%;TIF<50

PLC-7320 Control System

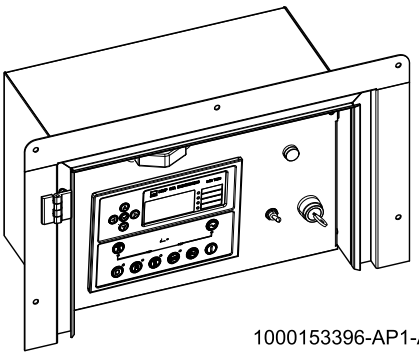

1000153396-AP1-A1

PLC-7320 is an advanced control module based on microprocessor, containing all necessary functions for protection of the genset and the breaker control. It can monitor the mains supply, and automatically start the engine when the mains is abnormal. Accurately measure various operational parameters and display all values and alarms information on the LCD. In addition, the control module can automatically shut down the engine and indicate the engine failure.

- Microprocessor control, with high stability and credibility
- Monitoring and measuring operational parameters of the mains supply and genset
- Indicating operation status, fault conditions, all parameters and alarms
- Multiple protections; multiple parameters display, like pressure, temp. etc.
- Manual, automatic and remote work mode selectable
- Real time clock for time and date display, overall runtime display, 250 log entries
- Overall power output display
- Integral speed/frequency detecting, telling status of start, rated operation, overspeed etc.
- Communication with PC via RS485 OR RS232 interface, using MODBUS protocol

4 Overall Dimensions

1000021276-DR1-B2

Dry weight	1036kg
Fuel tank capacity	140L
Dimensions L x W x H	2192x1013x1470.5mm

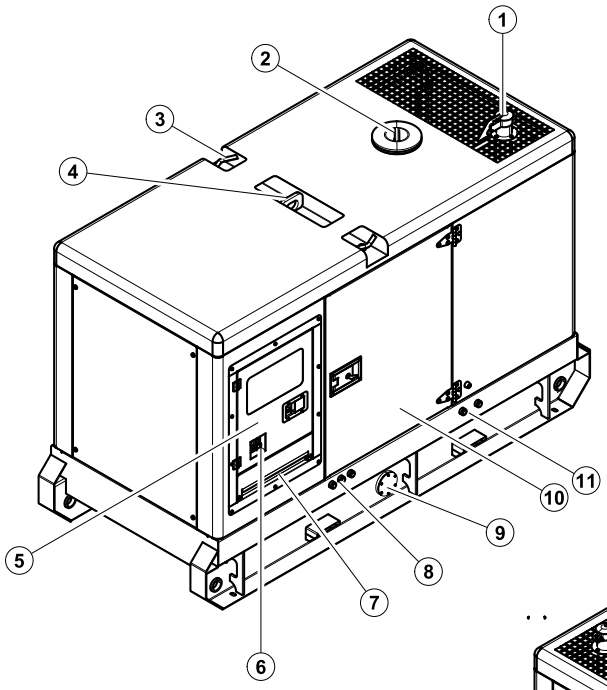

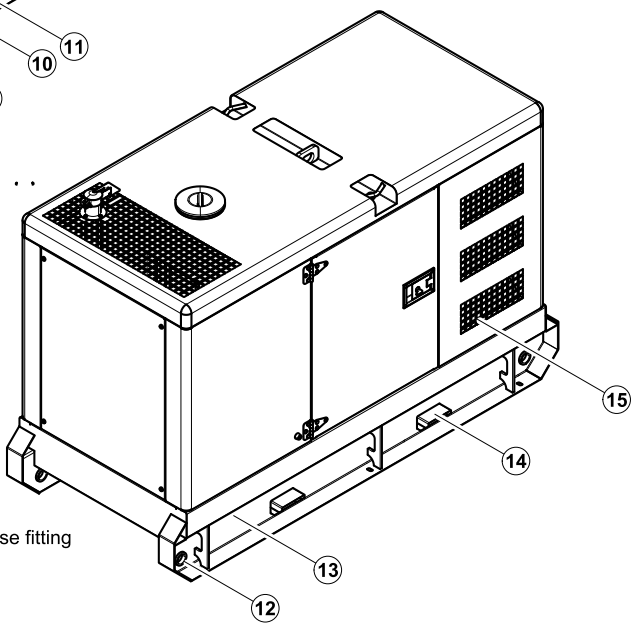

(8) Oil/coolant drain hose fitting
(7) Cable trench
(6) Emergency stop switch
(5) Control cabinet
(4) Lifting lug
(3) Roping lug
(2) Coolant inlet
(1) Exhaust gas outlet
(15) Air inlet
(14) Fork lift channel
(13) Base frame
(12) Tie down
(11) External fuel inlet/return hose fitting
(10) Access door
(9) Fuel drain

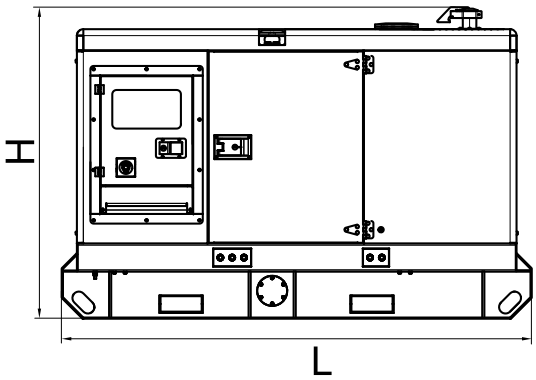

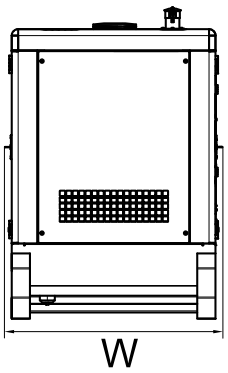

5 Control System

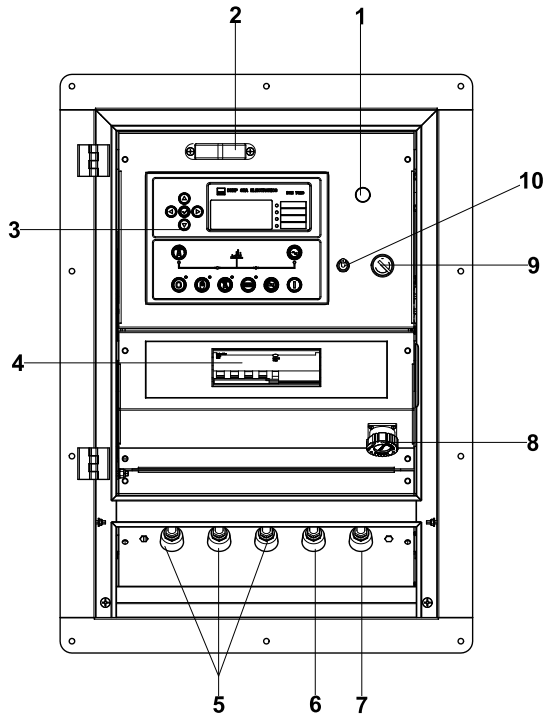

Control & field wiring cabinet

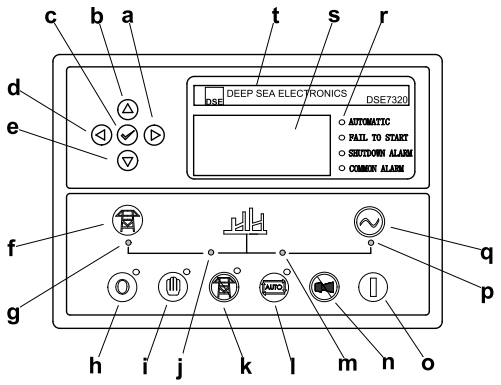

Control Panel

Ref.	Description
1	Charge indicator
2	Control cabinet lamp
3	Control module
4	Main circuit breaker
5	Live wire terminals
6	Neutral wire terminal
7	Ground wire terminal
8	Mains input/remote/AMF communication connector
9	Key switch
10	Control cabinet lamp switch

a	Button (next page)
b	Button (increase value / previous item)
c	Button (accept)
d	Button (previous page)
e	Button (decrease value / next item)
f	Button (transfer the load to the mains supply, when in Manual mode only)
g	Mains supply available LED
h	Stop / Reset button
i	Manual button (Manual control mode)
j	Mains supply on load LED
k	Test button (Test mode)
l	Auto button (Auto mode)
m	Genset on load LED
n	Mute/Lamp test button
o	Start button (Manual)
p	Genset available LED
q	Button (transfer the load to the genset, when in Manual mode only)
r	Alarm LED (4 alarm items)
s	LCD display
t	Control module name

1000153396-IT1-A1