ASO genset

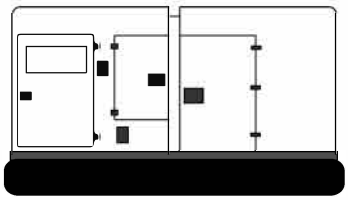

Generator set

Sound-proof type

WPS135S

SPECIFICATIONS

SE series
WPS135S
50 Hz @ 1500rpm,3-phase/5-wiring

1 Standards & Conditions

Design Standards

The designs and the productions are in conformity with:

- Conformite Europeenne (CE)
- China Compulsory Certification (CCC)
- ISO8528-5:2005
- GB/T2820.5-2009

Environmental Operating Conditions

- Installation place: Outdoors or indoors (well ventilated).
- Ambient temperature: -25℃ to 45℃.The coolant heater is needed when the temperature is below 5℃
- Humidity: Less than 80%.
- Altitude: Below one thousand (1000) meters.

Factory Inspection

- Inspection items.
- Protection devices working test.
- Starting ability in normal temperature.
- 50% rated power load moment capability.
- Voltage deviation and speed variation: 0%, 25%, 50%, 75%, 100%, 110% Load.

Painting Process

- Painting process specifications and colors are based on the manufacturer's standard.
- The customer could also choose the color which the manufacturer offers.

2 General Features

- Perkins engine 1106A-70TG1
- Close coupled to a Leroy Somer alternator LSA44.3L10
- Microprocessor control module PLC-7420
- NADER main circuit breaker: 225A
- Rotate speed governor: Mechanical governor
- Excitation System: Self Excited,SHUNT
- A.V.R.Model: R250
- Key switch
- Emergency stop switch
- ATS (automatic transfer switch) receptacle
- 1x12V/120AH sealed for life maintenance free battery
- Lockable battery isolator switch
- Powder coated canopy
- 50℃ radiator
- Oil pump on the engine
- Steel base frame with forkslots
- Vibration isolators between the engine/alternator and base frame
- Dry type air filter
- Base fuel tank for 14 hours running
- Drain points for fuel tank
- Operation Manual / Specifications

3 Equipment Specification

General technical data

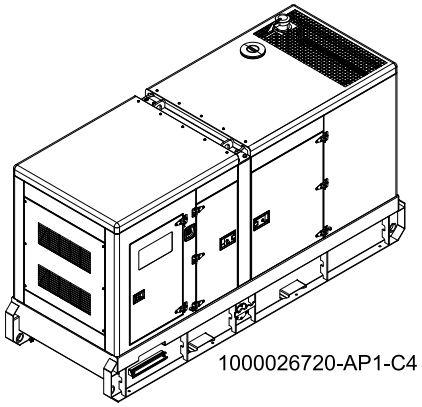

Model..... WPS135S

Structure type ..... R

Tank capacity.....420L

Dry weight..... 1711kg

Noise level @7m .....N/A

Dimensions L×W×H.....3338×1227×1843mm

Standby Power 150kVA/120kW

Prime Power..... 135kVA/108kW

Voltage	380V	400V	415V	440V
Ampere	205A	195A	188A	177A

Genset Fuel Consumption					
Frequency/Load	25%	50%	75%	100%	110%
50Hz (L/h)	9	15.9	22.7	30.28	33.8

Diesel Engine

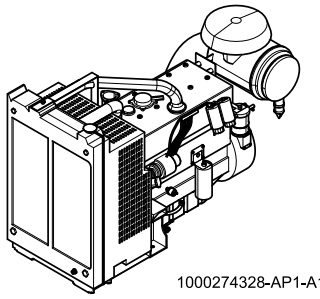

1000274328-AP1-A1

Engine Manufacturer/Brand	Perkins
Engine Model	1106A-70TG1
Dimensions L×W×H	1509×760×1042mm
Dry Weight (approx.)	725kg
Number of Cylinders	6
Bore	105mm
Stroke	135mm
Displacement	7.01L
Compression Ratio	18.2
Type of Injection	Direct injection
Intake System	Turbocharged
Intake Resistance	≤ 5kPa
Cooling System	Water cooled
Fan	Pusher
Battery Voltage	12V
Type of Fuel	ASTM D975, Class 1D & Class 2D
Type of Oil	API-CH4/ACEA E5
Oil Capacity	16.5L
Type of Coolant	Glycol mixture
Coolant Capacity (Only Engine)	9.5L
Heat Rejected To Exhaust System	89.8kW
Heat Rejected To Water&Oil	74.9kW
Back Pressure	≤ 6kPa
Standby Power	136.9kW
Prime Power	123.7kW
Fuel Consumption(100%load)	30.28L/h

Alternator

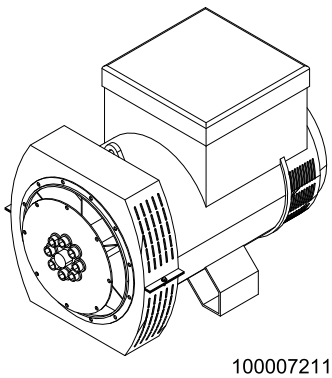

1000072114-AP1-A1

Alternator Manufacturer/Brand	Leroy Somer
Alternator Model	LSA44.3L10
Exciter	Brushless
Cooling Fan	Cast alloy aluminum
Windings	100% copper
Insulation Class	H
Winding Pitch	2/3
Terminals	12
Drip Proof	IP23
Altitude	≤1000m
Overspeed	2250rpm
Air Flow	0.25m³/s(50Hz),0.3m³/s(60Hz)
Voltage Regulation	±0.5%
Total harmonic TGH / THC at no load < 2 % - on load < 5%	
Telephone Interference	THF<2%;TIF<50

PLC-7420 Control System

1000090494-AP1-F2

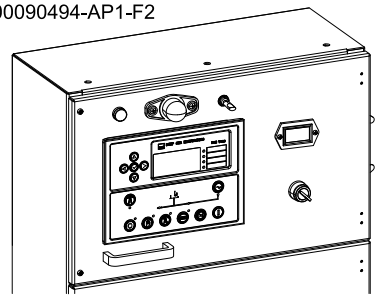

PLC-7420 is an advanced control module based on microprocessor, containing all necessary functions for protection of the genset and the breaker control. It can monitor the mains supply, and automatically start the engine when the mains is abnormal. Accurately measure various operational parameters and display all values and alarms information on the LCD. In addition, the control module can automatically shut down the engine and indicate the engine failure.

- Microprocessor control, with high stability and credibility
- Monitoring and measuring operational parameters of the mains supply and genset
- Indicating operation status, fault conditions, all parameters and alarms
- Multiple protections; multiple parameters display, like pressure, temp. etc.
- Manual, automatic and remote work mode selectable
- Real time clock for time and date display, overall runtime display, 250 log entries
- Overall power output display
- Integral speed/frequency detecting, telling status of start, rated operation, overspeed etc.
- Communication with PC via RS485 OR RS232 interface, using MODBUS protocol

4 Overall Dimensions

1000026720-DR1-C4

Dry weight	1711kg
Fuel tank capacity	420L
Dimensions L x W x H	3338x1227x1843mm

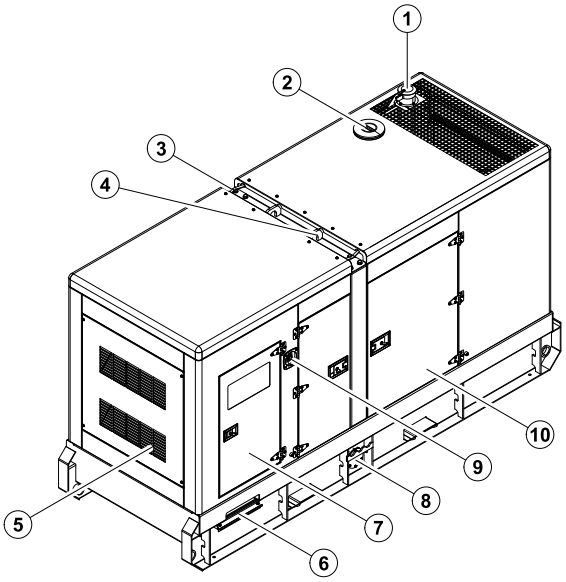

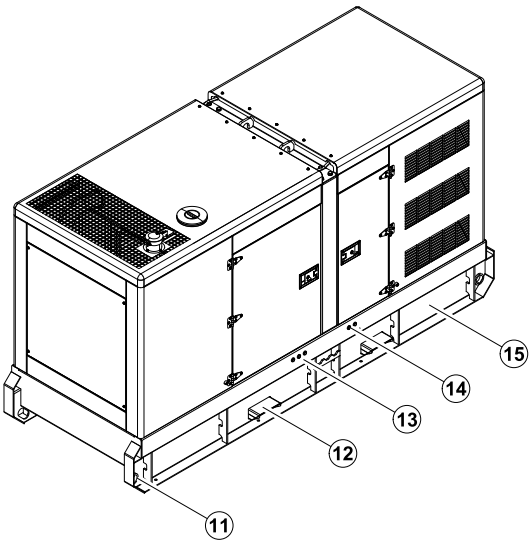

⑧ Fuel drain
⑦ Control cabinet
⑥ Cable trench
⑤ Air inlet
④ Lifting lug
③ Roping lug
② Coolant inlet
① Exhaust gas outlet
⑮ Base frame
⑭ Coolant / oil drain hose fitting
⑬ External fuel inlet/return hose fitting
⑫ Fork lift channel
⑪ Tie down
⑩ Access door
⑨ Emergency stop switch

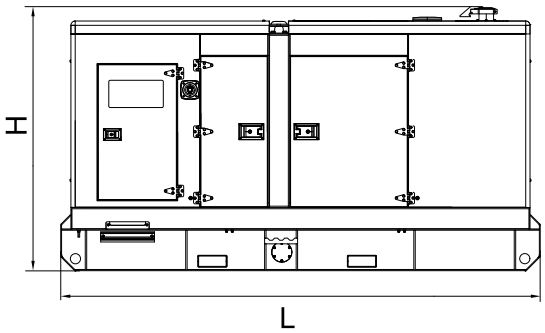

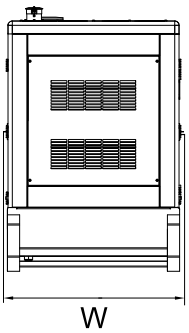

5 Control System

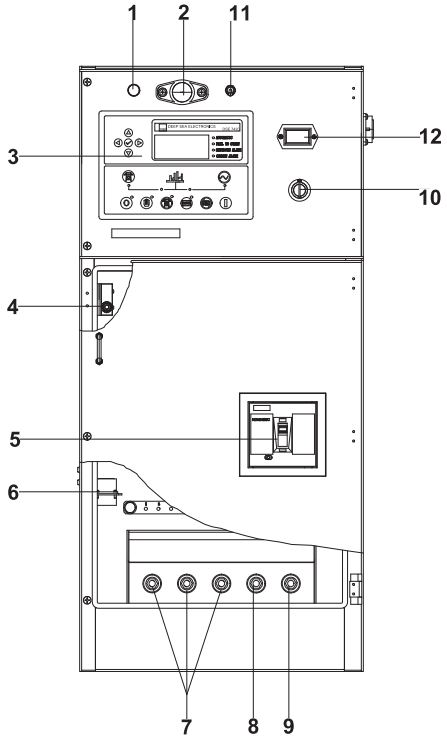

Control & field wiring cabinet

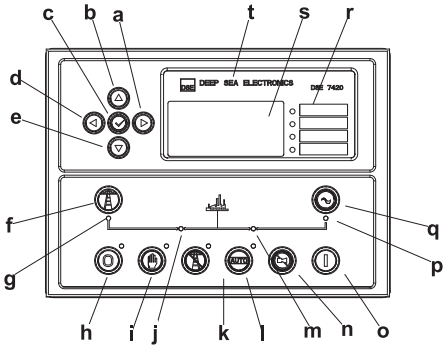

Control module

Ref.	Description
1	Charge indicator
2	Control cabinet lamp
3	Control module
4	Limit switch
5	Main circuit breaker
6	Mians input/remote/AMF communiction connetor
7	Live wire terminals
8	Neutral wire terminal
9	Ground wire terminal
10	Key switch
11	Control cabinet lamp switch
12	Time counter

a	Button (next page)
b	Button (increase value / previous item)
c	Button (accept)
d	Button (previous page)
e	Button (decrease value / next item)
f	Button (transfer the load to the mains supply, when in Manual mode only)
g	Mains supply available LED
h	Stop / Reset button
i	Manual button (Manual control mode)
j	Mains supply on load LED
k	Test button (Test mode)
l	Auto button (Auto mode)
m	Genset on load LED
n	Mute/Lamp test button
o	Start button (Manual)
p	Genset available LED
q	Button (transfer the load to the genset, when in Manual mode only)
r	Alarm LED (4 alarm items)
s	LCD display
t	Control module name

1000094094-IT1-F2